SDG-1283 0.3 HP Minimal Die Grinder

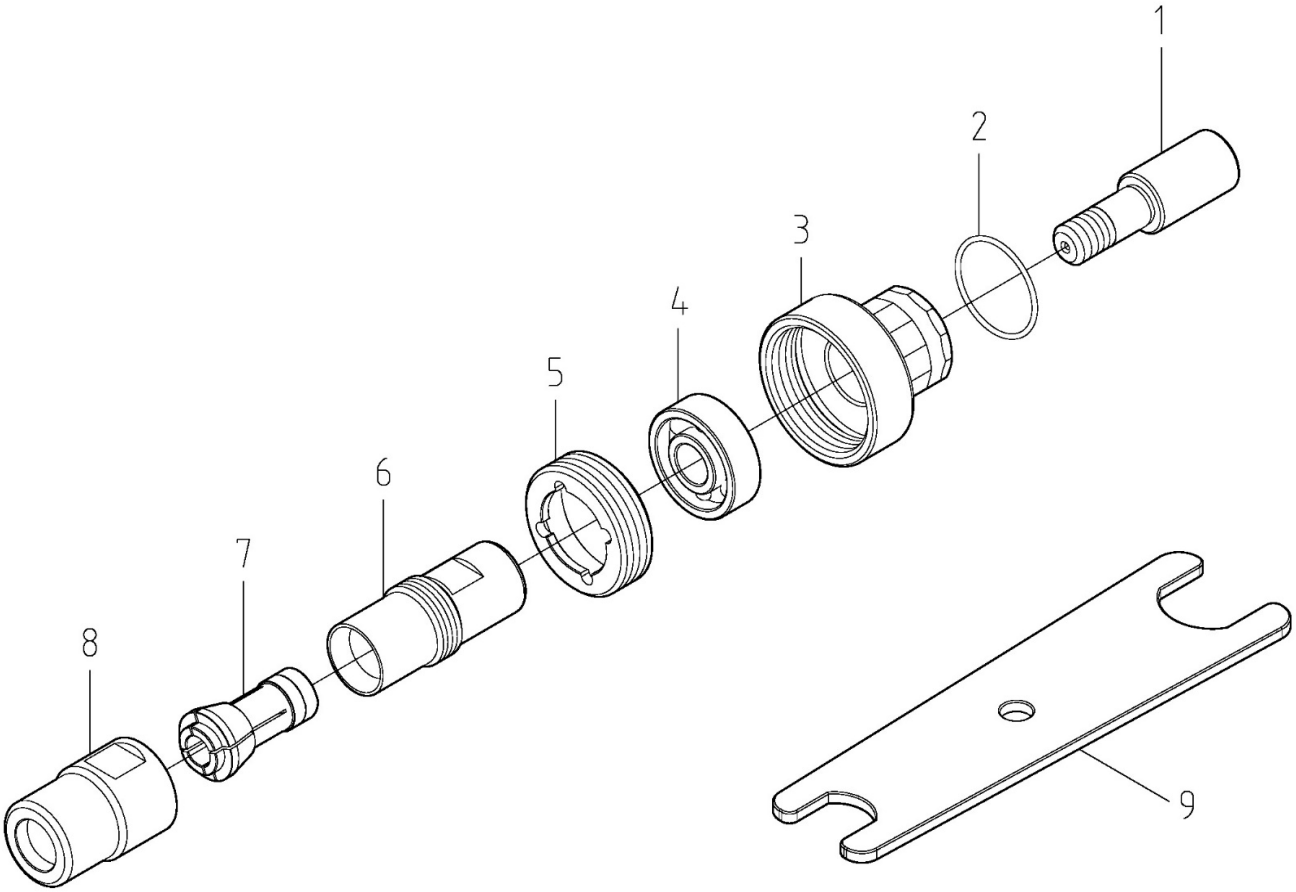

PART LIST

NO.	CODE NO.	PARTS NAME (ENG)	Q'TY	NO.	CODE NO.	PARTS NAME (CHI)	PARTS NAME (ENG)	Q'TY
1	2-025128301	Anvil	1					
2	2-916015010	O-Ring	1					
3	2-035128305	Lock Nut	1					
4	2-902608-06	Ball Bearing	1					
5	2-017128301	Washer	1					
6	2-065109001	Bushing	1					
7	2-066109002-02	Chuck	1					
8	2-035109002	Lock Nut	1					
9	3-576106101	Wrench	2					

Aug-24