MINI PISTOL AIR POLISHER EXPLODED VIEW

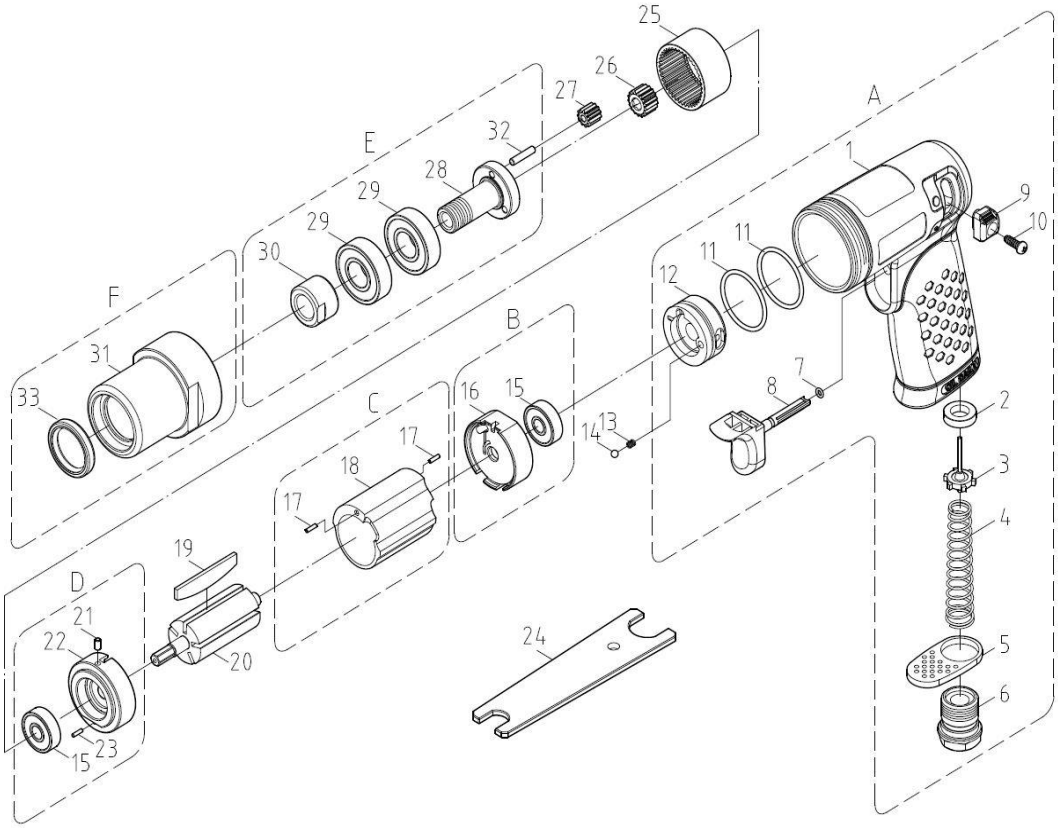

PART LIST (零件清單)

NO.	CODE NO.	PARTS NAME (CHI)	PARTS NAME (ENG)	UNIT PRICE (US$/PC) (FOB Taiwan)	Q'TY
1	2-001106001	本體	Housing	6.3	1
2	2-927010	油封	Oil Seal	0.3	1
3	2-010105801	開閉銷	Pin Valve Rod	0.7	1
4	2-002105802	錐型彈簧	Cone Spring	0.4	1
5	2-004105801	排氣罩	Exhaust Deflector	0.6	1
6				1.8	1
	2-005105801-04	進氣接頭	Air Inlet	1.8	
7	2-916002510	O形環	O-Ring	0.2	1
8	2-030105801	板機	Trigger	0.6	1
9	2-031105801	方向調節器	Reverse Lever	0.6	1
10	2-9263510-02	鐵板螺絲	Screw	0.2	1
11	2-916025118	O形環	O-Ring	0.2	2
12	2-068106001	後蓋閥座	Rear Plate Spacer	2.7	1
13	2-007101002	彈簧	Spring	0.3	1
14	2-9180318	鋼珠	Steel Ball	0.2	1
15	2-902626-02	軸承	Ball Bearing	0.8	2
16	2-011106001	後蓋	Rear Plate	1.2	1
17	2-9281506	彈簧銷	Spring Pin	0.2	2
18	2-012103302	汽缸	Cylinder	2	1
19	2-014106001	葉片	Blade	0.2	5
20	2-013106201	轉子	Rotor	3.2	1
21	2-9282505	彈簧銷	Spring Pin	0.2	1
22	2-015105801	前蓋	Front Plate	1.6	1
23	2-91701506	實心銷	Pin	0.2	1
24	3-576106101	開口板手	Wrench	0.6	1

NO.	CODE NO.	PARTS NAME (CHI)	PARTS NAME (ENG)	UNIT PRICE (US$/PC) (FOB Taiwan)	Q'TY
25	2-034106201	齒輪環	Internal Gear	3.3	1
26	2-036106202	齒輪	Gear	1.9	1
27	2-036106201	齒輪	Gear	0.3	3
28	2-037106203	惰輪座	Gear Carrier	2.3	1
29	2-9026001-02	軸承	Ball Bearing	1	2
30	2-035106203	鎖緊螺帽	Lock Nut	1.1	1
31	2-027106202	前護蓋	Front Casing	4.5	1
32	2-91703014	實心銷	Pin	0.2	3
33	2-927011	油封	Oil Seal	1	1

Consumable parts No. 2, 3, 7, 11, 13, 14, 19, 25, 26, 27

HAS-P1062

DEC. 2023